Industrial Sensors

Precise and Reliable

Superb Technology of Industrial Control

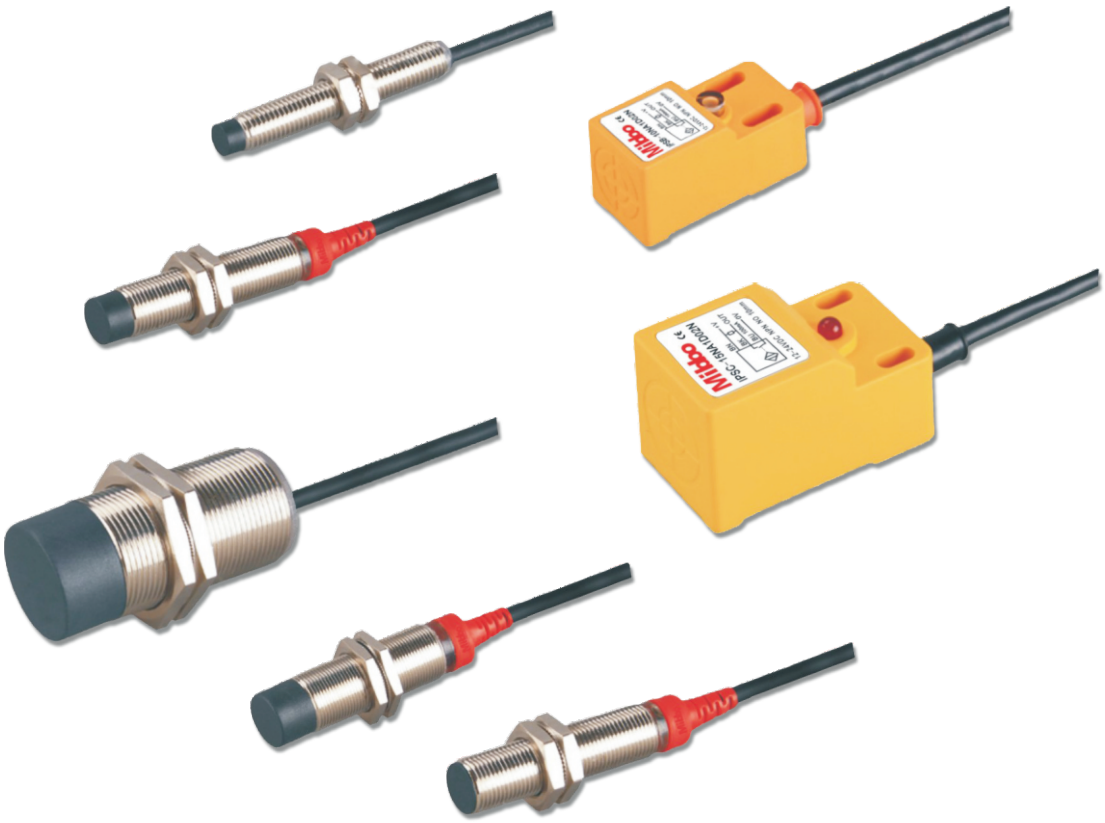

Mibbo

Manufacturing Products for QA Customers

Manufacturing Products for QA Customers

Mibbo

Family

>>>About Mibbo

Precise and Reliable Superb Technology of Industrial Control

Mibbo is committed to researching and developing, manufacturing and selling industrial control products. To serve the midrange and high end equipment manufactures and system integrators. It pursues "Manufacturing products for QA Customers" to provide customers with high quality products and personalized solutions, and finally to achieve corporate value and customer value growth.

Industrial sensors is one of the major products in Mibbo. To provide our customers more efficient,reliable and qualified products in many fields,such as Industrial Automatic Control System, Industrial Machinery and Equipment,Safety Control System,Position Limitation Protection,Location Detection,Signal Transmission,Automatic Counting and Speed Measurement etc.

>>> Contents

Cylindrical Inductive Proximity Sensor DC-3/4Wire	2-4
Cylindrical Inductive Proximity Sensor DC-2Wire	5-7
Cylindrical Inductive Proximity Sensor AC-2Wire	8-9
Rectangular Inductive Proximity Sensor DC-3Wire	10-11
Rectangular Inductive Proximity Sensor DC-2Wire	12
Rectangular Inductive Proximity Sensor AC-2Wire	13
Capacitive Proximity Sensor DC-3Wire	14-15
Specification	16-17
Applications	18

Housing Shape		M4	M5	M6.5	
Mounting		Shield	Shield	Shield	Non- Shield
Sensing Distance		0.8mm	0.8mm	1.5mm	2mm
Model No.	NPN NO	ISG04-R8NA1D02F	IMR05-R8NA1D02F	ISG06-1R5NA1D02F	ISG06-02NA1D02N
	NPN NC	ISG04-R8NB1D02F	IMR05-R8NB1D02F	ISG06-1R5NB1D02F	ISG06-02NB1D02N
	PNP NO	ISG04-R8PA1D02F	IMR05-R8PA1D02F	ISG06-1R5PA1D02F	ISG06-02PA1D02N
	PNP NC	ISG04-R8PB1D02F	IMR05-R8PB1D02F	ISG06-1R5PB1D02F	ISG06-02PB1D02N

Technical Parameter				
Supply Voltage	10-30VDC	10-30VDC	10-30VDC	10-30VDC
Load Current	<100mA	<100mA	<100mA	<100mA
Voltage Drop	<2V	<2V	<2V	<2V
Consumption Current	<10mA	<10mA	<10mA	<10mA
Hysteresis	<20%	<20%	<20%	<20%
Repeatability	<3%	<3%	<3%	<3%
Switch Frequency	2000Hz	2000Hz	1500Hz	1000Hz
Output Indicator	Red LED	Red LED	Red LED	Red LED
Polarity Protection	Yes	Yes	Yes	Yes
Surge Protection	Yes	Yes	Yes	Yes
Short Circuit Protection	No	No	Yes	Yes
Switch Point Drift	<10%	<10%	<10%	<10%
Operating Temperature	-25~70℃	-25~70℃	-25~70℃	-25~70℃
Operating Humidity	35~95%	35~95%	35~95%	35~95%
Protection Degree	IP67	IP67	IP67	IP67
Housing Material	Stainless Steel	Nickel-CopperAlloy	Stainless Steel	Stainless Steel
Connection	2M PVC Cable	2M PVC Cable	2M PVC Cable	2M PVC Cable
Certification	CE	CE	CE	CE

Dimensional drawing

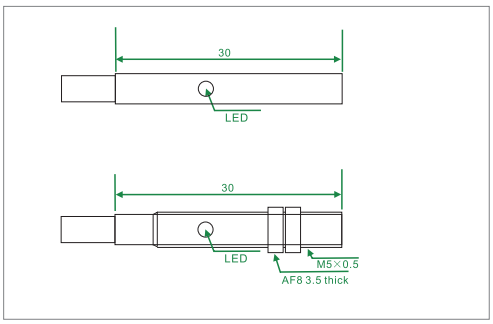

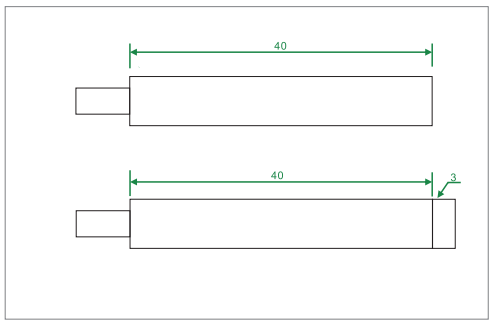

Connection diagram

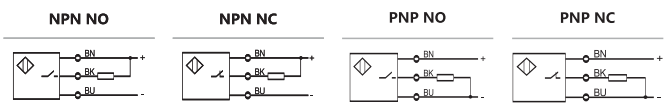

Housing Shape		M8		M12	
Mounting		Shield	Non- Shield	Shield	Non- Shield
Sensing Distance		1mm	2mm	2mm	4mm
Model No.	NPN NO	IMR08-01NA1D02F	IMR08-02NA1D02N	IMR12-02NA1D02F	IMR12-04NA1D02N
	NPN NC	IMR08-01NB1D02F	IMR08-02NB1D02N	IMR12-02NB1D02F	IMR12-04NB1D02N
	NPN NO+NC	—	—	IMR12-02NC1D02F	IMR12-04NC1D02N
	PNP NO	IMR08-01PA1D02F	IMR08-02PA1D02N	IMR12-02PA1D02F	IMR12-04PA1D02N
	PNP NC	IMR08-01PB1D02F	IMR08-02PB1D02N	IMR12-02PB1D02F	IMR12-04PB1D02N
	PNP NO+NC	—	—	IMR12-02PC1D02F	IMR12-04PC1D02N

Technical Parameter				
Supply Voltage	10-30VDC	10-30VDC	10-30VDC	10-30VDC
Load Current	<100mA	<100mA	<100mA	<100mA
Voltage Drop	<2V	<2V	<2V	<2V
Consumption Current	<10mA	<10mA	<10mA	<10mA
Hysteresis	<20%	<20%	<20%	<20%
Repeatability	<3%	<3%	<3%	<3%
Switch Frequency	1000Hz	1000Hz	800Hz	800Hz
Output Indicator	Red LED	Red LED	Red LED	Red LED
Polarity Protection	Yes	Yes	Yes	Yes
Surge Protection	Yes	Yes	Yes	Yes
Short Circuit Protection	Yes	Yes	Yes	Yes
Switch Point Drift	<10%	<10%	<10%	<10%
Operating Temperature	-25~70℃	-25~70℃	-25~70℃	-25~70℃
Operating Humidity	35~95%	35~95%	35~95%	35~95%
Protection Degree	IP67	IP67	IP67	IP67
Housing Material	Nickel-CopperAlloy	Nickel-CopperAlloy	Nickel-CopperAlloy	Nickel-CopperAlloy
Connection	2M PVC Cable	2M PVC Cable	2M PVC Cable	2M PVC Cable
Certification	CE	CE	CE	CE

Dimensional drawing

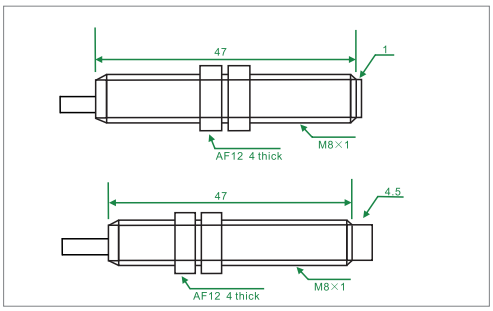

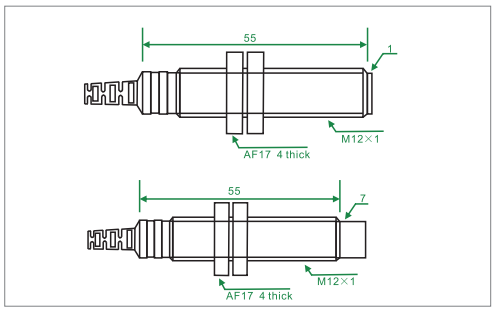

Connection diagram

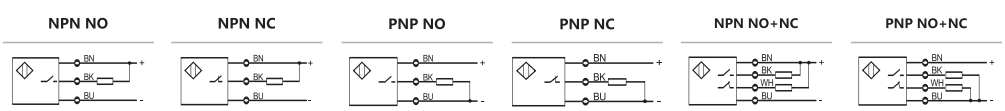

Housing Shape		M18		M30	
Mounting		Shield	Non- Shield	Shield	Non- Shield
Sensing Distance		5mm	8mm	10mm	15mm
Model No.	NPN NO	IMR18-05NA1D02F	IMR18-08NA1D02N	IMR30-10NA1D02F	IMR30-15NA1D02N
	NPN NC	IMR18-05NB1D02F	IMR18-08NB1D02N	IMR30-10NB1D02F	IMR30-15NB1D02N
	NPN NO+NC	IMR18-05NC1D02F	IMR18-08NC1D02N	IMR30-10NC1D02F	IMR30-15NC1D02N
	PNP NO	IMR18-05PA1D02F	IMR18-08PA1D02N	IMR30-10PA1D02F	IMR30-15PA1D02N
	PNP NC	IMR18-05PB1D02F	IMR18-08PB1D02N	IMR30-10PB1D02F	IMR30-15PB1D02N
	PNP NO+NC	IMR18-05PC1D02F	IMR18-08PC1D02N	IMR30-10PC1D02F	IMR30-15PC1D02N

Technical Parameter				
Supply Voltage	10-30VDC	10-30VDC	10-30VDC	10-30VDC
Load Current	<100mA	<100mA	<100mA	<100mA
Voltage Drop	<2V	<2V	<2V	<2V
Consumption Current	<10mA	<10mA	<10mA	<10mA
Hysteresis	<20%	<20%	<20%	<20%
Repeatability	<3%	<3%	<3%	<3%
Switch Frequency	800Hz	600Hz	500Hz	300Hz
Output Indicator	Red LED	Red LED	Red LED	Red LED
Polarity Protection	Yes	Yes	Yes	Yes
Surge Protection	Yes	Yes	Yes	Yes
Short Circuit Protection	Yes	Yes	Yes	Yes
Switch Point Drift	<10%	<10%	<10%	<10%
Operating Temperature	-25~70℃	-25~70℃	-25~70℃	-25-70℃
Operating Humidity	35~95%	35~95%	35~95%	35~95%
Protection Degree	IP67	IP67	IP67	IP67
Housing Material	Nickel-CopperAlloy	Nickel-CopperAlloy	Nickel-CopperAlloy	Nickel-CopperAlloy
Connection	2M PVC Cable	2M PVC Cable	2M PVC Cable	2M PVC Cable
Certification	CE	CE	CE	CE

Dimensional drawing

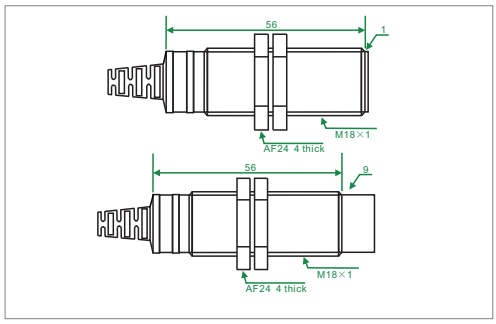

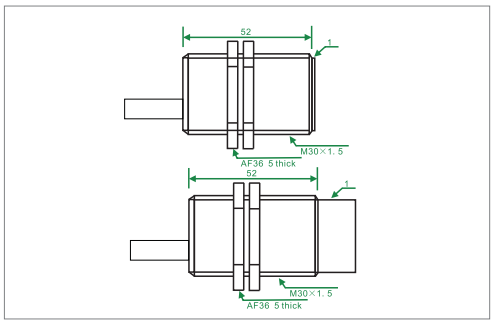

Connection diagram

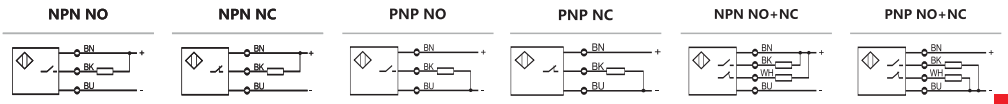

Housing Shape		M4	M5	M6.5	
Mounting		Shield	Shield	Shield	Non- Shield
Sensing Distance		0.8mm	0.8mm	1.5mm	2mm
Model No.	NO	ISG04-R8XA1D02F	IMR05-R8XA1D02F	ISG06-1R5XA1D02F	ISG06-02XA1D02N
	NC	ISG04-R8XB1D02F	IMR05-R8XB1D02F	ISG06-1R5XB1D02F	ISG06-02XB1D02N

Technical Parameter				
Supply Voltage	10-30VDC	10-30VDC	10-30VDC	10-30VDC
Load Current	<100mA	<100mA	<100mA	<100mA
Voltage Drop	<8V	<8V	<8V	<8V
Consumption Current	<1mA	<1mA	<1mA	<1mA
Hysteresis	<20%	<20%	<20%	<20%
Repeatability	<3%	<3%	<3%	<3%
Switch Frequency	1500Hz	1500Hz	1000Hz	800Hz
Output Indicator	Red LED	Red LED	Red LED	Red LED
Polarity Protection	Yes	Yes	Yes	Yes
Surge Protection	Yes	Yes	Yes	Yes
Short Circuit Protection	No	No	No	No
Switch Point Drift	<10%	<10%	<10%	<10%
Operating Temperature	-25~70℃	-25~70℃	-25~70℃	-25~70℃
Operating Humidity	35~95%	35~95%	35~95%	35~95%
Protection Degree	IP67	IP67	IP67	IP67
Housing Material	Stainless Steel	Nickel-CopperAlloy	Stainless Steel	Stainless Steel
Connection	2M PVC Cable	2M PVC Cable	2M PVC Cable	2M PVC Cable
Certification	CE	CE	CE	CE

Dimensional drawing

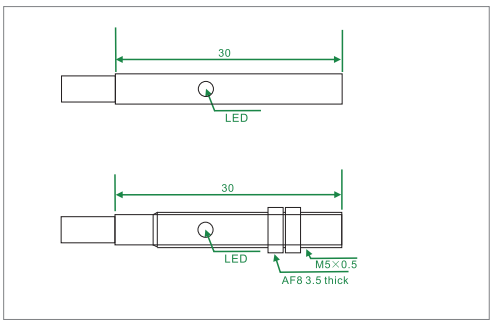

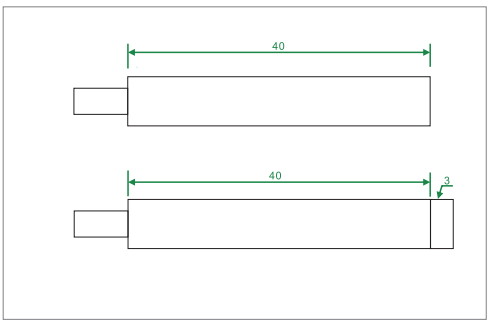

Connection diagram

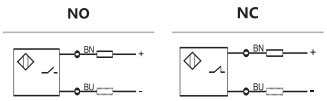

Housing Shape		M8		M12	
Mounting		Shield	Non- Shield	Shield	Non- Shield
Sensing Distance		1mm	2mm	2mm	4mm
Model No.	NO	IMR08-01XA1D02F	IMR08-02XA1D02N	IMR12-02XA1D02F	IMR12-04XA1D02N
	NC	IMR08-01XB1D02F	IMR08-02XB1D02N	IMR12-02XB1D02F	IMR12-04XB1D02N

Technical Parameter				
Supply Voltage	10-30VDC	10-30VDC	10-30VDC	10-30VDC
Load Current	<100mA	<100mA	<100mA	<100mA
Voltage Drop	<6V	<6V	<6V	<6V
Consumption Current	<1mA	<1mA	<1mA	<1mA
Hysteresis	<20%	<20%	<20%	<20%
Repeatability	<3%	<3%	<3%	<3%
Switch Frequency	1000Hz	800Hz	800Hz	500Hz
Output Indicator	Red LED	Red LED	Red LED	Red LED
Polarity Protection	Yes	Yes	Yes	Yes
Surge Protection	Yes	Yes	Yes	Yes
Short Circuit Protection	No	No	No	No
Switch Point Drift	<10%	<10%	<10%	<10%
Operating Temperature	-25~70℃	-25~70℃	-25~70℃	-25~70℃
Operating Humidity	35~95%	35~95%	35~95%	35~95%
Protection Degree	IP67	IP67	IP67	IP67
Housing Material	Nickel-CopperAlloy	Nickel-CopperAlloy	Nickel-CopperAlloy	Nickel-CopperAlloy
Connection	2M PVC Cable	2M PVC Cable	2M PVC Cable	2M PVC Cable
Certification	CE	CE	CE	CE

Dimensional drawing

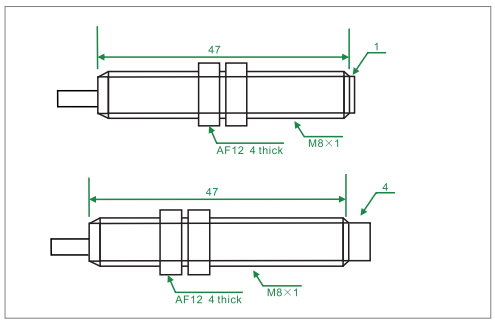

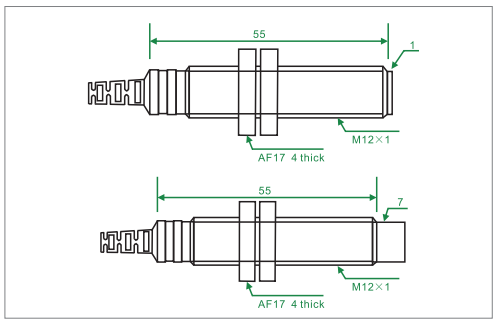

Connection diagram

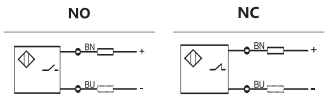

Housing Shape		M18		M30	
Mounting		Shield	Non- Shield	Shield	Non- Shield
Sensing Distance		5mm	8mm	10mm	15mm
Model No.	NO	IMR18-05XA1D02F	IMR18-08XA1D02N	IMR30-10XA1D02F	IMR30-15XA1D02N
	NC	IMR18-05XB1D02F	IMR18-08XB1D02N	IMR30-10XB1D02F	IMR30-15XB1D02N

Technical Parameter				
Supply Voltage	10-30VDC	10-30VDC	10-30VDC	10-30VDC
Load Current	<100mA	<100mA	<100mA	<100mA
Voltage Drop	<6V	<6V	<6V	<6V
Consumption Current	<1mA	<1mA	<1mA	<1mA
Hysteresis	<20%	<20%	<20%	<20%
Repeatability	<3%	<3%	<3%	<3%
Switch Frequency	500Hz	300Hz	300Hz	200Hz
Output Indicator	Red LED	Red LED	Red LED	Red LED
Polarity Protection	Yes	Yes	Yes	Yes
Surge Protection	Yes	Yes	Yes	Yes
Short Circuit Protection	No	No	No	No
Switch Point Drift	<10%	<10%	<10%	<10%
Operating Temperature	-25~70℃	-25~70℃	-25~70℃	-25~70℃
Operating Humidity	35~95%	35~95%	35~95%	35~95%
Protection Degree	IP67	IP67	IP67	IP67
Housing Material	Nickel-CopperAlloy	Nickel-CopperAlloy	Nickel-CopperAlloy	Nickel-CopperAlloy
Connection	2M PVC Cable	2M PVC Cable	2M PVC Cable	2M PVC Cable
Certification	CE	CE	CE	CE

Dimensional drawing

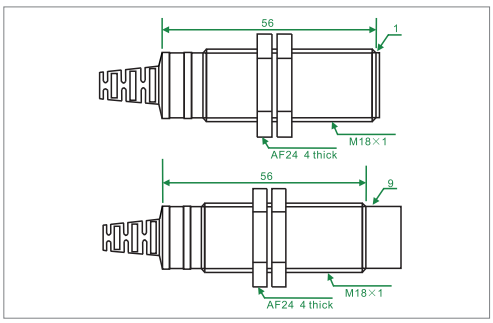

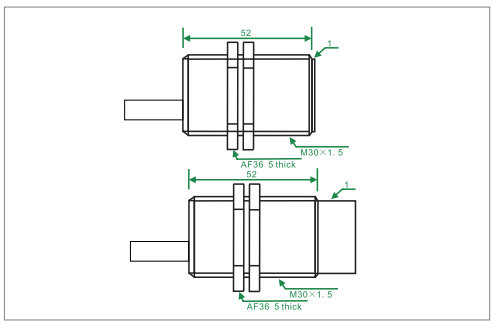

Connection diagram

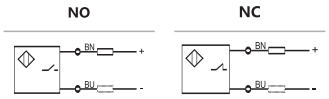

Housing Shape		M12		M18	
Mounting		Shield	Non- Shield	Shield	Non- Shield
Sensing Distance		2mm	4mm	5mm	8mm
Model No.	NO	IMR12-02YA1A02F	IMR12-04YA1A02N	IMR18-05YA1A02F	IMR18-08YA1A02N
	NC	IMR12-02YB1A02F	IMR12-04YB1A02N	IMR18-05YB1A02F	IMR18-08YB1A02N

Technical Parameter				
Supply Voltage	20-250VAC	20-250VAC	20-250VAC	20-250VAC
Load Current	<200mA	<200mA	<300mA	<300mA
Voltage Drop	<10V	<10V	<10V	<10V
Consumption Current	<3mA	<3mA	<3mA	<3mA
Hysteresis	<20%	<20%	<20%	<20%
Repeatability	<3%	<3%	<3%	<3%
Switch Frequency	20Hz	20Hz	20Hz	20Hz
Output Indicator	Red LED	Red LED	Red LED	Red LED
Polarity Protection	No	No	No	No
Surge Protection	Yes	Yes	Yes	Yes
Short Circuit Protection	No	No	No	No
Switch Point Drift	<10%	<10%	<10%	<10%
Operating Temperature	-25~70℃	-25~70℃	-25~70℃	-25~70℃
Operating Humidity	35~95%	35~95%	35~95%	35~95%
Protection Degree	IP67	IP67	IP67	IP67
Housing Material	Nickel-CopperAlloy	Nickel-CopperAlloy	Nickel-CopperAlloy	Nickel-CopperAlloy
Connection	2M PVC Cable	2M PVC Cable	2M PVC Cable	2M PVC Cable
Certification	CE	CE	CE	CE

Dimensional drawing

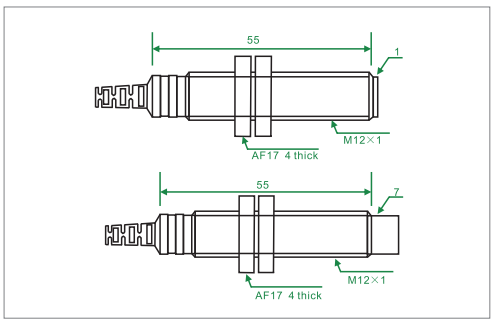

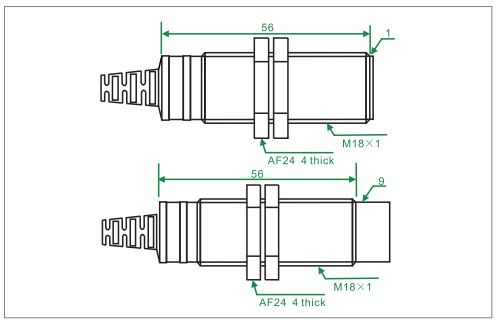

Connection diagram

SCR NO

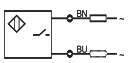

SCR NC

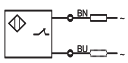

Housing Shape		M30	
Mounting		Shield	Non- Shield
Sensing Distance		10mm	15mm
Model No.	NO	IMR30-10YA1A02F	IMR30-15YA1A02N
	NC	IMR30-10YB1A02F	IMR30-15YB1A02N

Technical Parameter		
Supply Voltage	20-250VAC	20-250VAC
Load Current	<300mA	<300mA
Voltage Drop	<10V	<10V
Consumption Current	<3mA	<3mA
Hysteresis	<20%	<20%
Repeatability	<3%	<3%
Switch Frequency	20Hz	20Hz
Output Indicator	Red LED	Red LED
Polarity Protection	No	No
Surge Protection	Yes	Yes
Short Circuit Protection	No	No
Switch Point Drift	<10%	<10%
Operating Temperature	-25~70℃	-25~70℃
Operating Humidity	35~95%	35~95%
Protection Degree	IP67	IP67
Housing Material	Nickel-CopperAlloy	Nickel-CopperAlloy
Connection	2M PVC Cable	2M PVC Cable
Certification	CE	CE

Dimensional drawing

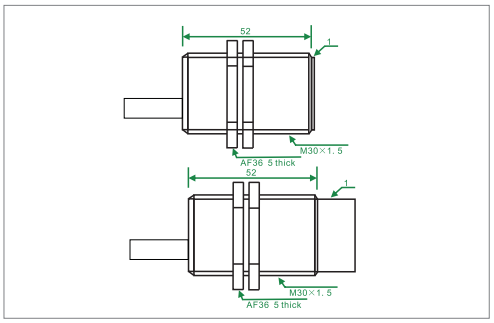

Connection diagram

SCR NO

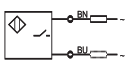

SCR NC

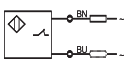

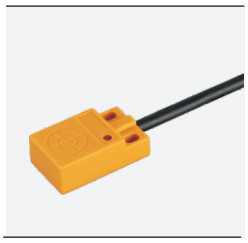
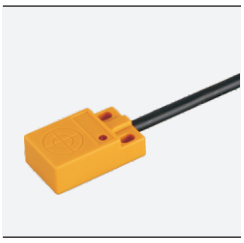

Housing Shape		S10		S18	
Mounting		Non- Shield	Non- Shield	Non- Shield	Non- Shield
Sensing Distance		5mm	8mm	5mm	8mm
Output	NPN NO	IPSD-05NA1D02N	IPSD-08NA1D02N	IPSA-05NA1D02N	IPSA-08NA1D02N
	NPN NC	IPSD-05NB1D02N	IPSD-08NB1D02N	IPSA-05NB1D02N	IPSA-08NB1D02N
	PNP NO	IPSD-05PA1D02N	IPSD-08PA1D02N	IPSA-05PA1D02N	IPSA-08PA1D02N
	PNP NC	IPSD-05PB1D02N	IPSD-08PB1D02N	IPSA-05PB1D02N	IPSA-08PB1D02N

Technical Parameter				
Supply Voltage	10-30VDC	10-30VDC	10-30VDC	10-30VDC
Load Current	<100mA	<100mA	<100mA	<100mA
Voltage Drop	<2V	<2V	<2V	<2V
Consumption Current	<10mA	<10mA	<10mA	<10mA
Hysteresis	<20%	<20%	<20%	<20%
Repeatability	<3%	<3%	<3%	<3%
Switch Frequency	600Hz	400Hz	600Hz	400Hz
Output Indicator	Red LED	Red LED	Red LED	Red LED
Polarity Protection	Yes	Yes	Yes	Yes
Surge Protection	Yes	Yes	Yes	Yes
Short Circuit Protection	Yes	Yes	Yes	Yes
Switch Point Drift	<10%	<10%	<10%	<10%
Operating Temperature	-25~70℃	-25~70℃	-25~70℃	-25~70℃
Operating Humidity	35~95%	35~95%	35~95%	35~95%
Protection Degree	IP67	IP67	IP67	IP67
Housing Material	ABS	ABS	PBT	PBT
Connection	2M PVC Cable	2M PVC Cable	2M PVC Cable	2M PVC Cable
Certification	CE	CE	CE	CE

Dimensional drawing

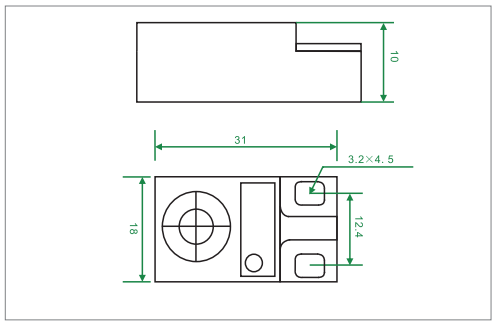

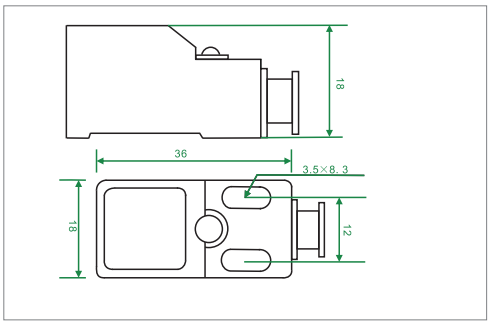

Connection diagram

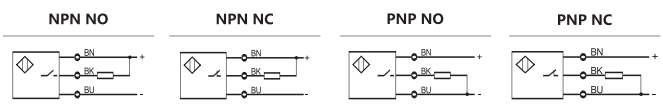

Housing Shape		S25	S30
Mounting		Non- Shield	Non- Shield
Sensing Distance		10mm	15mm
Output	NPN NO	IPSB-10NA1D02N	IPSC-15NA1D02N
	NPN NC	IPSB-10NB1D02N	IPSC-15NB1D02N
	PNP NO	IPSB-10PA1D02N	IPSC-15PA1D02N
	PNP NC	IPSB-10PB1D02N	IPSC-15PB1D02N

Technical Parameter		
Supply Voltage	10-30VDC	10-30VDC
Load Current	<100mA	<100mA
Voltage Drop	<2V	<2V
Consumption Current	<10mA	<10mA
Hysteresis	<20%	<20%
Repeatability	<3%	<3%
Switch Frequency	500Hz	300Hz
Output Indicator	Red LED	Red LED
Polarity Protection	Yes	Yes
Surge Protection	Yes	Yes
Short Circuit Protection	Yes	Yes
Switch Point Drift	<10%	<10%
Operating Temperature	-25~70℃	-25~70℃
Operating Humidity	35~95%	35~95%
Protection Degree	IP67	IP67
Housing Material	PBT	ABS
Connection	2M PVC Cable	2M PVC Cable
Certification	CE	CE

Dimensional drawing

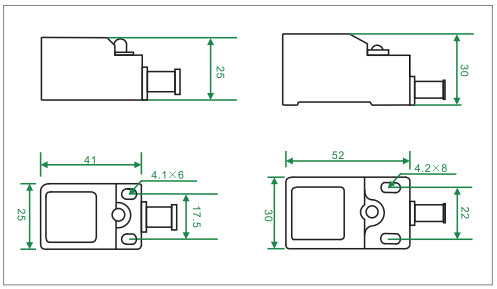

Connection diagram

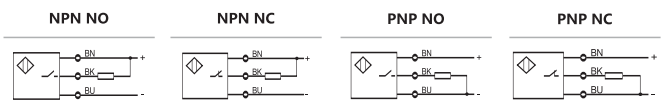

Housing Shape		S18		S25	S30
Mounting		Non- Shield	Non- Shield	Non- Shield	Non- Shield
Sensing Distance		5mm	8mm	10mm	15mm
Output	NO	IPSA-05XA1D02N	IPSA-08XA1D02N	IPSB-10XA1D02N	IPSC-15XA1D02N
	NC	IPSA-05XB1D02N	IPSA-08XB1D02N	IPSB-10XB1D02N	IPSC-15XB1D02N

Technical Parameter				
Supply Voltage	10-30VDC	10-30VDC	10-30VDC	10-30VDC
Load Current	<100mA	<100mA	<100mA	<100mA
Voltage Drop	<6V	<6V	<6V	<6V
Consumption Current	<1mA	<1mA	<1mA	<1mA
Hysteresis	<20%	<20%	<20%	<20%
Repeatability	<3%	<3%	<3%	<3%
Switch Frequency	500Hz	300Hz	300Hz	300Hz
Output Indicator	Red LED	Red LED	Red LED	Red LED
Polarity Protection	Yes	Yes	Yes	Yes
Surge Protection	Yes	Yes	Yes	Yes
Short Circuit Protection	NO	NO	NO	NO
Switch Point Drift	<10%	<10%	<10%	<10%
Operating Temperature	-25~70℃	-25~70℃	-25~70℃	-25~70℃
Operating Humidity	35~95%	35~95%	35~95%	35~95%
Protection Degree	IP67	IP67	IP67	IP67
Housing Material	PBT	PBT	PBT	ABS
Connection	2M PVC Cable	2M PVC Cable	2MPVC Cable	2M PVC Cable
Certification	CE	CE	CE	CE

Dimensional drawing

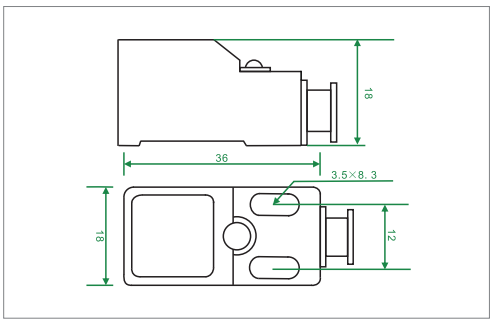

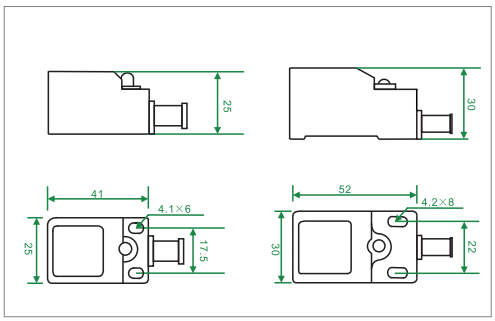

Connection diagram

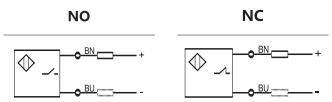

Housing Shape		S18		S25	S30
Mounting		Non- Shield	Non- Shield	Non- Shield	Non- Shield
Sensing Distance		5mm	8mm	10mm	15mm
Output	NO	IPSA-05YA2A02N	IPSA-08YA2A02N	IPSB-10YA2A02N	IPSC-15YA1A02N
	NC	IPSA-05YB2A02N	IPSA-08YB2A02N	IPSB-10YB2A02N	IPSC-15YB1A02N

Technical Parameter				
Supply Voltage	90-250VAC	90-250VAC	90-250VAC	20-250VAC
Load Current	<200mA	<200mA	<200mA	<300mA
Voltage Drop	<10V	<10V	<10V	<10V
Consumption Current	<3mA	<3mA	<3mA	<3mA
Hysteresis	<20%	<20%	<20%	<20%
Repeatability	<3%	<3%	<3%	<3%
Switch Frequency	20Hz	20Hz	20Hz	20Hz
Output Indicator	Red LED	Red LED	Red LED	Red LED
Polarity Protection	No	No	No	No
Surge Protection	Yes	Yes	Yes	Yes
Short Circuit Protection	No	No	No	No
Switch Point Drift	<10%	<10%	<10%	<10%
Operating Temperature	-25~70℃	-25~70℃	-25~70℃	-25~70℃
Operating Humidity	35~95%	35~95%	35~95%	35~95%
Protection Degree	IP67	IP67	IP67	IP67
Housing Material	PBT	PBT	PBT	ABS
Connection	2m PVC Cable	2m PVC Cable	2M PVC Cable	2M PVC Cable
Certification	CE	CE	CE	CE

Dimensional drawing

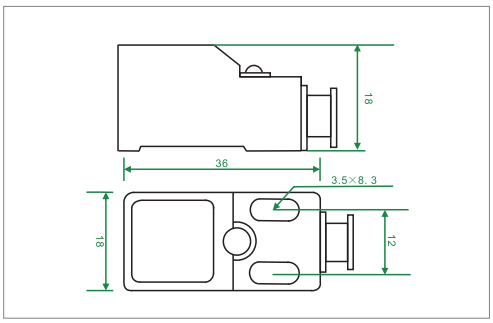

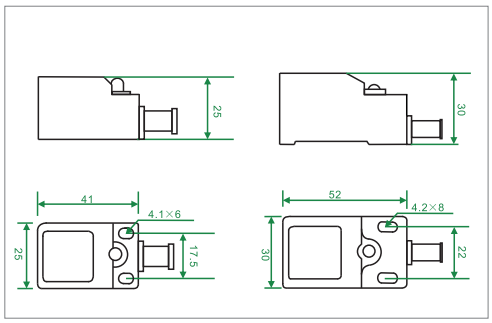

Connection diagram

SCR NO

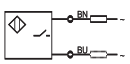

SCR NC

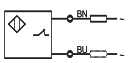

Housing Shape		M12		M18	
Mounting		Shield	Non- Shield	Shield	Non- Shield
Sensing Distance		2mm	4mm	5mm	8mm
Output	NPN NO	CMR12-02NA1D02F	CMR12-04NA1D02N	CMR18-05NA1D02F	CMR18-08NA1D02N
	NPN NC	CMR12-02NB1D02F	CMR12-04NB1D02N	CMR18-05NB1D02F	CMR18-08NB1D02N
	PNP NO	CMR12-02PA1D02F	CMR12-04PA1D02N	CMR18-05PA1D02F	CMR18-08PA1D02N
	PNP NC	CMR12-02PB1D02F	CMR12-04PB1D02N	CMR18-05PB1D02F	CMR18-08PB1D02N

Technical Parameter				
Supply Voltage	10-30VDC	10-30VDC	10-30VDC	10-30VDC
Load Current	<200mA	<200mA	<200mA	<200mA
Voltage Drop	<2V	<2V	<2V	<2V
Consumption Current	<10mA	<10mA	<10mA	<10mA
Hysteresis	<20%	<20%	<20%	<20%
Repeatability	<5%	<5%	<5%	<5%
Switch Frequency	50Hz	50Hz	50Hz	50Hz
Output Indicator	Red LED	Red LED	Red LED	Red LED
Polarity Protection	Yes	Yes	Yes	Yes
Surge Protection	Yes	Yes	Yes	Yes
Short Circuit Protection	Yes	Yes	Yes	Yes
Operating Temperature	-20~60℃	-20~60℃	-20~60℃	-20-60℃
Operating Humidity	35~95%	35~95%	35~95%	35-95%
Protection Degree	IP67	IP67	IP67	IP67
Housing Material	Nickel-CopperAlloy	Nickel-CopperAlloy	Nickel-CopperAlloy	Nickel-CopperAlloy
Connection	2M PVC Cable	2M PVC Cable	2M PVC Cable	2M PVC Cable
Certification	CE	CE	CE	CE

Dimensional drawing

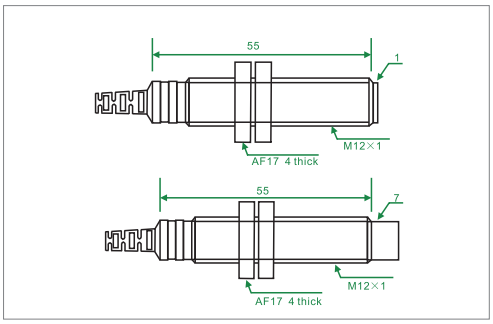

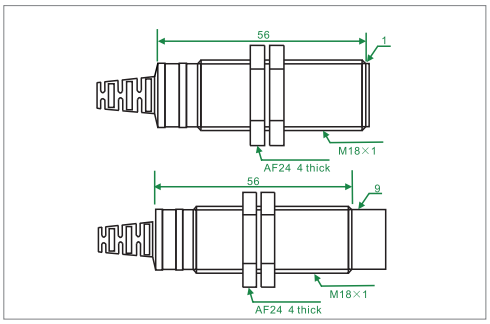

Connection diagram

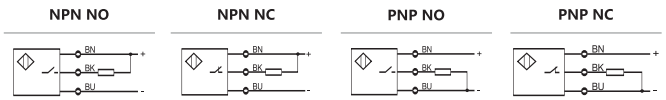

Housing Shape		M30	
Mounting		Shield	Non- Shield
Sensing Distance		10mm	15mm
Output	NPN NO	CMR30-10NA1D02F	CMR30-15NA1D02N
	NPN NC	CMR30-10NB1D02F	CMR30-15NB1D02N
	PNP NO	CMR30-10PA1D02F	CMR30-15PA1D02N
	PNP NC	CMR30-10PB1D02F	CMR30-15PB1D02N

Technical Parameter		
Supply Voltage	10-30VDC	10-30VDC
Load Current	<200mA	<200mA
Voltage Drop	<2V	<2V
Consumption Current	<10mA	<10mA
Hysteresis	<20%	<20%
Repeatability	<3%	<3%
Switch Frequency	50Hz	50Hz
Output Indicator	Red LED	Red LED
Polarity Protection	Yes	Yes
Surge Protection	Yes	Yes
Short Circuit Protection	Yes	Yes
Operating Temperature	-25~70℃	-25~70℃
Operating Humidity	35~95%	35~95%
Protection Degree	IP67	IP67
Housing Material	Nickel-CopperAlloy	Nickel-CopperAlloy
Connection	2M PVC Cable	2M PVC Cable
Certification	CE	CE

Dimensional drawing

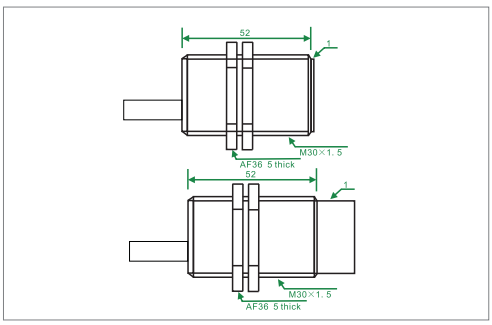

Connection diagram

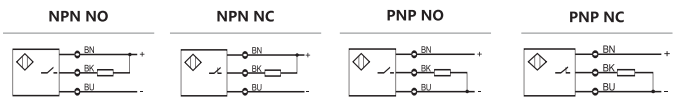

Operating Principle of Inductive Proximity Sensor

Inductance proximity sensor use the mutual inductance principle of metal conductor and alternating electromagnetic field.Located in detecting coil produces high frequency magnetic field sensor front,when metal objects close to the magnetic field, eddy current is generated in metal objects to magnetic energy attenuation,when metal objects close to the sensor sensing surface,when the magnetic field energy attenuation to a certain extent,trigger sensor switch output signal,so as to achieve non-contact detection of purpose.

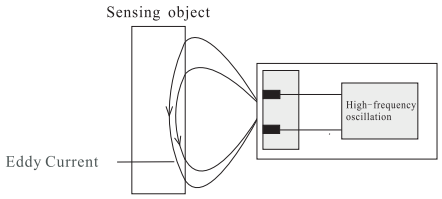

Operating Principle of Capacitive Proximity Sensor

The surface of capacitive proximity sensor consists of two concentric metal electrode,the two electrodes form a capacitance concatenated in RC oscillation circuit,when power on, no oscillation,RC oscillator when goal towards the sensor sensing surface near the capacitance increases,the oscillator start oscillation.The processing of the back - level circuit is converted into the switch signal,and the purpose of detecting the existence of the object has been detected. Capacitive sensors to detect metal objects,but also to detect non-metallic objects,distance,the motion of the metallic object can achieve maximum distance movement of non-metallic objects is decided by the dielectric constant of the material,the greater the dielectric constant of the material,can obtain the action,the greater the distance.

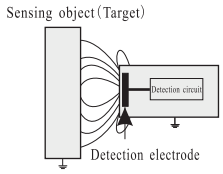

Specification

Standard Target

The induction distance of inductance proximity sensor varies with the size and material of the detection body.With the increase of the detection body shape, the induction distance is longer. When the volume reaches a certain value, the sensor distance will no longer increase with the shape of the detection body and become a fixed value.The minimum detection body that usually reaches the fixed length induction distance is called the standard test body.

The standard test body is usually made of iron (St37),with a square thickness of 1mm,and the diameter of the side length and the big one in the distance.

Sensing Distance

Nominal induction distance is a theoretical value.

Effective induction distance is sensor under specific installation environment, temperature, voltage measured induction distance, are generally rated voltage and (23 + / - 5 ℃) measured at room temperature.

Actual induction distance is under specific temperature and voltage, single inductive distance of proximity switch, is generally allow ambient temperature - 25 - + 70 ℃, the rated input voltage range.

The reliable induction distance is a distance from the sensing surface of the action point after the correct action of the switch when the specified conditions are ensured.

The sensing distance of the body.

The sensing distance of the sensor can be changed slightly due to changes in ambient temperature, voltage change and other conditions.Therefore,in order to stabilize the sensor, the maximum approximate position of the detection body should be less than the sensing distance.When using the standard test body, set the actual sensing distance to be below 80% of the rated action distance.In addition, when the shape of the detection body is less than the standard test body or the detection body other than the iron,the actual induction distance must be shortened due to the shortening of the induction distance.Inductance sensor please refer to the attenuation coefficient of different metal materials,and the capacitive sensor can refer to the relative dielectric constant of the object.

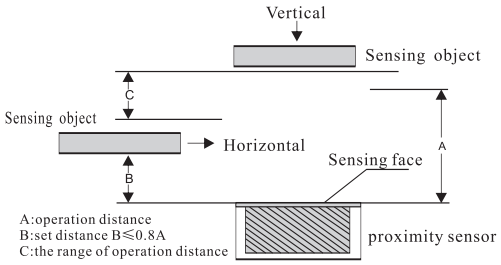

Attenuation coefficient

The detection body affects the sensor distance.The properties of the material of the test body play an important role,which can be described by the attenuation coefficient.The attenuation coefficient refers to the reduction of the action distance of a certain material relative to the iron (St37).The smaller the attenuation coefficient,the smaller the motion distance of a particular material.

Materials	Decay Factor
Iron	1.0
Copper	0.25-0.45
Bassr	0.35-0.50
Aluminium	0.30-0.45
Stainless Steel	0.60-1.00
Nickel	0.65-0.75
Cast Iron	0.93-1.05

Relative Dielectric Constant

The characteristic parameter of capacitor sensor is relative dielectric constant Relative dielectric constants, physical parameters representing dielectric properties or polarization properties of dielectric materials. The value is equal to the ratio of capacitance of capacitors of the same size made of the tested material as medium and vacuum as medium. Also known as relative capacitance.

For capacitive sensors, the sensing distance and sensitivity of different dielectric constants are different. The greater the dielectric constant of the material, the greater the induction distance can be obtained.

materials	dielectricconstant
air	1
teflon	2
wood	2~7
paraffin	2.2
gasoline	2.2
turpentine	2.2
transformer oil	2.2
paper	2.2

materials	dielectricconstant
polyethylene	2.3
polypropylene	2.3
cable rubber compound	2.5
sticky rubber	2.5
silicon	2.8
polyoxyethylene	2.9
polystyrene	3
celluloid	3

materials	dielectricconstant
polymethyl methacrylate	3.6
epoxy adhesives	3.6
bakelite	3.6
quartz glass	3.7
ebonite	4
oilpaper	4
cardboard pressed crumbs	4
ceramics	4.4

materials	dielectricconstant
stiff paper	4.5
quartz sand	4.5
glass	5
polyamide	5
mica	6
marble	8
alcohol	25.8
water	80

The sensing materials:

Solid	Wood,ceramic,glass,paper,plastic,stone,rubber,ice,non-ferrous materials and plant materials.
Liquid	Water,oil,glue and paint.
Granular	Plastic,particle,seed,feed and salt.
Powdery	Dye, soap powder, sand, cement, fertilizer, sugar, flour and coffee.

Output current

The sensor allows the maximum current flowing through the output tube.

Leakage Current

When the sensor is not connected, the residual current in its load is called leakage current.

Hysteresis

The detection body is close to the sensor sensor surface, and the motion distance of the trigger sensor is different from that of the detection body when it is away from the sensor.

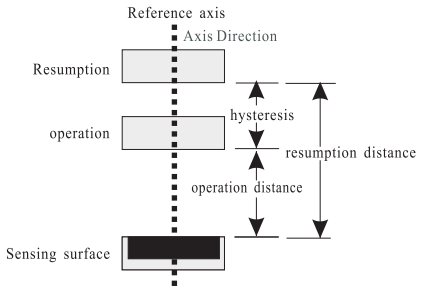

Consumption Current

The current required in the working state of the sensor.

Voltage Drop

Pressure drop is the voltage measured at both ends of the sensor or the output end when the sensor is connected.

Switch Frequency

The switching frequency is the maximum number of sensor actions per second.

Polarity Protection

The DC sensor prevents polarity reversal protection.

Short Circuit Protection

If the load current increases to a certain extent, the output will be closed and released periodically until the short circuit is relieved.

Surge Protection

The surge mainly refers to the transient overvoltage in the circuit that exceeds the normal working voltage, which may cause the circuit to burn out in a flash. Surge protection device can effectively absorb or shunt the sudden great energy to protect the switch from damage.

Protection Grade

The IP protection rating system is drafted by the IEC(INTERNATIONAL ELECTROTECHNICAL COMMISSION). The electrical appliances are classified according to the characteristics of dust and moisture proof. In this case, the external object contains tools, and people's fingers are not exposed to the live electric part of the appliance, so as to avoid electric shock. IP protection level is composed of two Numbers, the first digital said product from the dust, the level of the external things out, the second digital said product moisture proof, waterproof into airtight degree, the greater the number said the higher degree of protection.

Description of protection grade

IP □ □

0:No protection
1:The charge inside the hand touching(Φ50mm)
2:The charge inside the hand touching(Φ12mm)
3.Prevent solid objects with thickness or diameter greater than2.5mm into internal charging part.
4.Prevent solid objects with a thickness or diameter greater than1.0mm into the internal charging part.
5:Prevent the dust invasion of operation.
6:Completely prevent dust invasion.

0:No protection
1:Make the vertical drop drop harmless.
2:No harmful effect is made on the drop drop of 15 degrees in the vertical direction.
3:It has no harmful effect on the drop drop of 60 degrees in the vertical direction.
4:No harmful effects can be caused by splashing water droplets in any direction.
5:No harmful effects of water spraying in any direction.
6:Water that is sprayed in any direction cannot be penetrated.
7:To immerse in water without water under certain conditions.
8:It can be used in water under certain pressure.

Precautions for Safe Use

The proximity sensor can be divided into embedment and non-embedment according to the installation method. Embedded type can be used in metal.Non-embedment is not used in metal,but the distance is longer than the embedding type.

Proximity switch for embedded installation.

The sensor surface can be flush with the metal surface when the sensor is installed. The distance between the switch surface and the metal object opposite to it is greater than 3Sn, and the distance between the two adjacent switches must be greater than or equal to D.

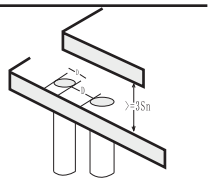

Proximity switch for non-embedded installation.

They can be identified by their heads, and there is no metal shell around the non-flush sensing surface. The distance between the sensing surface and the metal object on the opposite side must be greater than or equal to 3Sn, and the other two adjacent proximity switches must be greater than or equal to 3D.

Sn: is the nominal detection distance of the sensor.
D: the length or diameter of the sensor surface.

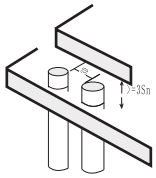

Precautions of Connections

2 Wires

Connection

Please correctly connect the cable of the sensor. If there is any connection error or unreliable wiring, it will damage the sensor and peripheral devices. For wiring method, please refer to the following figure:

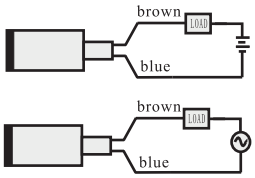

Cabling

When connecting the cable of the sensor, the cable should be separated from the power line and the high voltage line. Please absolutely avoid using the same wiring slot, the same conduit wiring, otherwise would cause the wrong action. If the cable need to be longer, more than 30 m below please choose section 0.3 mm cable, when more than 30 m, please choose the conductor cable impedance under 100 euro/km, in the high-speed response, due to factors such as conductor capacitance, make the output waveform distortion, please pay special attention to.

The sensors' "and","or"connection

The AND OR OR of the 2-wire dc switch output sensor cannot be connected in principle. In addition, it is not possible to connect with the contact.

Connection with PLC

The DC input module of the programmable controller can be connected with the DC switch 2 wire sensor, but before using, it is necessary to confirm the engagement of the DC input module ON ON\OFF.

Ex.

1, ON

(power supply voltage)-(the action voltage of the input module) is greater than or equal to (the saturation voltage of the sensor) or (power supply voltage)-(input module.

The minimum ON current (internal impedance) is greater than (the saturation voltage of the sensor) :

2, OFF

(input module minimum OFF current)

3 Wires

Connection

The 3-wire dc type sensor can be connected with OR OR OR.There are two types of output:NPN and PNP.Can connect switch power relay, electromagnet, counter and other dc drive load.

NPN Output connection

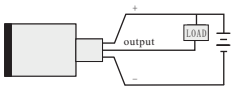

PNP Output connection

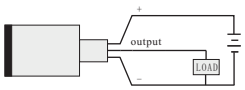

"Or" Connection

When the sensor OR connection is connected, any sensor action can drive the load. The number of sensors depends on the leakage current and, as long as it does not affect the load action, multiple connections can be made. NPN and PNP types are not intermixed.

NPN Output, 'OR' Connection

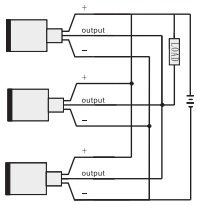

PNP Output, 'OR' Connection

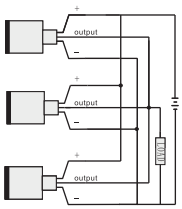

"And" Connection

When the sensor AND connection are connected, all the sensor actions can drive the load. The number of sensors depends on its saturation voltage and, as long as it does not affect the sensor's power supply voltage and load drive voltage, it can be connected. The response speed of the sensor is the accumulation of initial reset of each sensor.

NPN Output, 'And' Connection

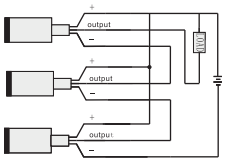

PNP Output 'And' Connection

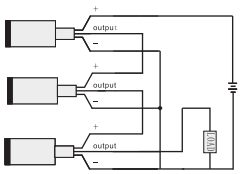

Connect with PLC

The DC input module of the programmable controller can be connected directly to the DC switch 3-wire NPN or PNP type output, and the power of the sensor can be used with DC+24V DC stabilized voltage supply.

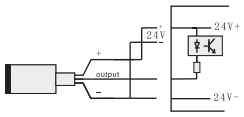

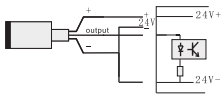

On/Off Attention

The output state of the sensor when the power is switched on or OFF, whether the detection or non-detection is OFF state. In particular, when the power is connected, the output state is OFF state in a certain time, which is called the initial reset. However, in the following situations, the output will have an instant ON(OFF) state, which is proportional to the length of the motion distance of the sensor, about 10-100ms. When the sensor is connected to a counter and programmable controller, there will be no problem because of the initial reset circuit inside the programmable controller. On other occasions, please avoid the following situations:

1. The detection object is located near the detection distance of the sensor.
2. For dc voltage type and dc switch type sensor, the time constant increases sharply (descending) when the power is switched on/off.
3. The ac switch type sensor has self-excitation and noise when the power is switched on.

Model Coding

I	P	S	A	–	05	N	A	1D	02	N
Series	Housing Material	Housing Shape	Dimensions		Sensing Distance	Output Mode	Output State	Power Voltage	Cable Length	Mounting
I:Inductive Proximity Sensor C:Capacitive Proximity Sensor	M:nickel plated brass D:die cast alloy P:plastic S:Stainless Steel	R:Threaded cylindrical G:Smooth cylindrical S:Square U:Groove shape O:Annulus L:Arcuate	Diameter: 04:4mm 05:5mm 06:6.5mm 08:8mm 12:12mm 18:18mm 22:22mm 30:30mm 34:34mm 40:40mm Square: A:18*18*36 B:25*25*41 C:30*30*52 D:10*18*30		R8:0.8mm 01:1mm 1R5:1.5mm 02:2mm 04:4mm 05:5mm 06:6mm 08:8mm 10:10mm 12:12mm 15:15mm 20:20mm 35:35mm	N:NPN P:PNP X:DC 2 Wires Y:AC 2 Wires Z:AC 3 Wires T:AC/DC 2 Wires	A:NO B:NC C:NO+NC R:Relay output	1D:DC 10-30V 1A:AC20-250V 2D:DC15-30V 3D:DC10-60V 4D:DC5V 5D:DC8.2V 2A:AC90-250V 1L:AC24-240V DC12-240V	02:2m 03:3m 10:10m Joint type: V1:M12 contact (4needle) V2:M8 contact (3needle) V3:cable with M12 contact V4:cable with M8 contact V5:contact terminal	N:Non- Shield F:Shield

Inductive Proximity Sensor

Sensing the screws on the tape

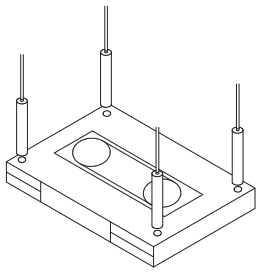

Control the depth of the brick hole

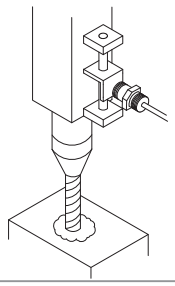

Sensing the door on/off

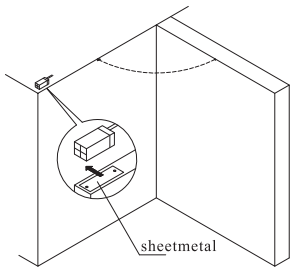

Sensing CAM Position

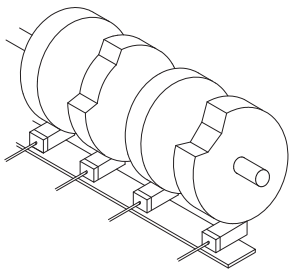

Watch the Table Running at a High Speed

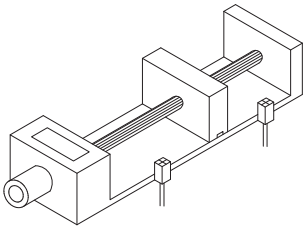

Counting

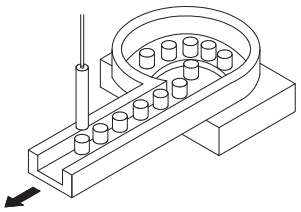

Capacitive Proximity Sensor

Sensing the Liquid Level

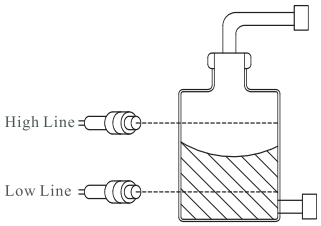

Detect Objects in Package

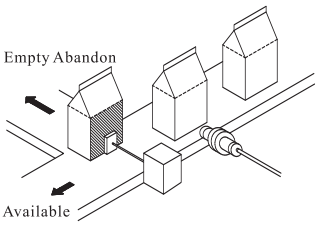

Bottle Cover Detection

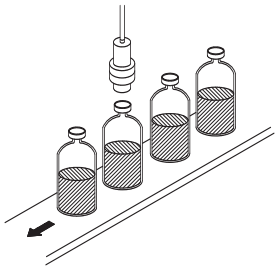

Fixed poin

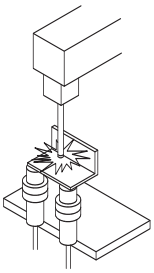

The test bench is rotated in place

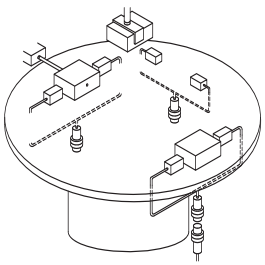

Monitor whether the item is broken

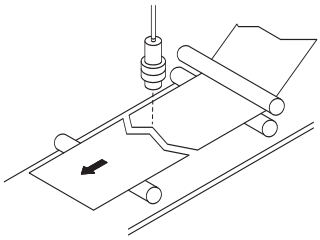

Mibbo (Xiamen) Automation Technology Co,Ltd.
www.mibbo.cn

E803 Taiwan Technology Business Incubator,Torch(Xiang'an)
Industrial Park,Xiamen, Fujian, China
ZIP Code:361100
Tel:0592-5651090
Fax:0592-5651085

Due to changes in standards and materials, the characteristics described in this article and the images in this material are subject to change without prior notice, please confirm to our business department.

Subscription No.: PM-Q4I02
2018.02